AIAA/ICAS International Air and Space Symposium and Exposition: The Next 100 Y
14-17 July 2003, Dayton, Ohio

AIAA 2003-2810

EMISSIONLESS AIRCRAFT: REQUIREMENTS AND CHALLENGES

Timothy J. Wickenheiser
Arun K. Sehra
Gary T. Seng
Joshua E. Freeh
Jeffery J. Berton
National Aeronautics and Space Administration
John H. Glenn Research Center
21000 Brookpark Road
Cleveland, Ohio 44135

Abstract

NASA's Office of Aerospace Technology (OAT) goals for aeronautics include protecting the local environmental quality and the global climate by reducing aircraft noise and emissions. In support of these objectives, the NASA Glenn Research Center has developed an Aeropropulsion Vision, which ultimately results in an emissionless, silent aeropropulsion system. This cleaner, quieter system is envisioned to rely on fuel cells and electromechanical systems for primary propulsion. These systems would use hydrogen fuel cells, which produce water vapor instead of CO_2 and NO_x in the exhaust.

NASA Glenn Research Center has begun investigating the possible technologies required for an emissionless, silent propulsion system at many levels including basic materials and reformer research for fuel cells, systems analysis, and detailed CFD and nodal analysis. Applications have been investigated for General Aviation, Commuters and small Commercial Airliners. This paper summarizes the investigations defining the technology requirements and examining the technology development challenges that NASA will address. Systems analysis has served as an initial investigation into various power and propulsion configurations and approaches. The results of these analyses are used as a basis for generating system and technology requirements. The electric drive propulsion technology requirements and challenges are discussed along with NASA's current technology activities.

Introduction

In response to NASA's mission "To understand and protect our home planet" the Office of Aerospace Technology (OAT) has established the Goal [2] to "Revolutionize Aviation; Enable the safe, environmentally friendly expansion of aviation". The objectives of this goal include increasing safety and security, reducing emissions, reducing noise, increasing capacity and increasing mobility.

NASA Glenn Research Center has developed an Aeropropulsion Vision for 21st Century Aircraft Engines to address the propulsion contributions towards the Revolutionize Aviation Goal. This vision culminates in the application of Electric Drive Propulsion for powering aircraft. This Electric Drive Propulsion concept is based on the use fuel cells and electric motors to drive high-powered ducted fans (propulsors). This portion of the vision is referred to as Alternate Energy Propulsion Revolution. The overall evaluation of electric drive propulsion concepts must include the evaluation of hydrogen fuel infrastructure, hydrogen production and distribution, and overall cost. While these issues are important, this paper focuses only on the in-flight CO_2 and NO_X emissions and the impact of these technologies on the aircraft.

Electric Drive Propulsion Benefits

While supporting several objectives of NASA's Revolutionize Aviation Goal, the electric drive propulsion directly supports the objective of reducing aircraft NO_X, and CO_2 emissions. This concept, when applied in a distributed propulsion system, will

This material is declared a work of the U.S. Government and is not subject to copyright protection in the United States.

also help to significantly reduce the propuslion system noise, thereby leading to an emmisionless, silent aircraft. Recent NASA goals set an objective of a 50% reduction in CO_2 and and an 80% reduction in NO_X by 2022. Clearly, electric drive propulsion, since it is not dependent on hydrocarbon fuel and combusion process (which produces NO_X due to high temperature), will result in elimination of CO_2 and NO_X emissions. However, the hydrogen fuel cells do produce water vapor. The environmental impact of this water vapor emissions is not clear.

NASA Glenn Research Center has begun investigating the benefits and challenges of electric drive propulsion. It is anticipated that electric drive propulsion can not be incorporated into large commercial transports until well beyond the 2022 timeframe. However, other applications of this technology can be incorporated in a significantly nearer timeframe. Specifically, small general aviation applications of electric propulsion can be demonstrated with current off the shelf technology and operational applications can be done with technology currently in development. Demonstrations and some applications of commuter aircraft may be possible with technology currently being demonstrated in government and university laboratories.

21st Century Aeropropulsion Vision

As noted above, in response to the Revolutionize Aviation Goal, NASA Glenn Research Center has developed an Aeropropulsion Vision for 21st Century Aircraft Engines [3]. This vision proposes a phased aeropropulsion research approach to realize the vision for 21st Century air transportation (Figure 1). These phased revolutions will be done by incorporating innovation successes from the preceding phases to enable new revolutions.

The Gas Turbine Revolution (as characterized by Variable Capacity, Ultra High Bypass Ratio, Intelligent Engines) concentrates on component design and systems operability that result in gas turbine propulsion systems that are compact, intelligent, and efficient for subsonic and supersonic transports.

The Engine Configuration Revolution (as characterized by Distributed Vectored Propulsion systems) will focus on smart engine operations and distributed vectored propulsion systems. Distributed exhaust and engine concepts will be an integral part of advanced airframe designs.

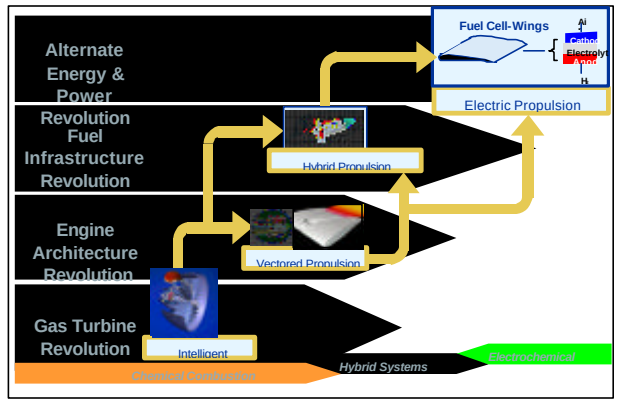

Figure 1. Propulsion System Revolutions.

The Fuel Infrastructure Revolution (whose technologies crosscut the three future revolutions) will make possible the use of alternate fuels such as low carbon fuels, hydrogen and hybrids towards low emissions propulsion concepts.

The Alternate Energy Propulsion Revolution, which is the focus of this paper, will exploit fuel cells and other high-energy power sources towards powering emissionless, non-gas turbine propulsion systems. The concept currently envisioned for the revolution includes hydrogen powered fuel cells, liquid hydrogen fuel storage, high power cryogenic motors, and cryogenic power management and distribution systems.

Electric Drive Propulsion System

Current aircraft propulsion systems utilize hydrocarbon fuels, generally gasoline or jet fuel, which is stored in a tank, see Figure 2. This fuel is combusted in an intermittent combustion or tubine engine core. The engine then drives a fan or propeller which accelerates the incoming air to produce the majority of thrust. In a turbofan engine (high bypass ratio) some thrust is also obtained from the exhaust gas of the engine core.

The electric drive system is envisioned to use hydrogen fuel, which is also stored

in fuel tanks. In a Polymer Exchange Membrane (PEM) fuel cell, the hydrogen fuel is reacted with oxygen (from the air) in the fuel cell and produces electrical power, see Figures 2 and 3. Since PEM fuel cells are typically designed for constant pressure operation, a supercharger is needed. This electrical power is conditioned and distributed by the power management and distribution system. Power for the auxiliary system and to run the supercharger compressor are also distributed by the power management and distribution (PMAD) system. The majority of the power is provided to the electric motor. This motor converts the electrical power to shaft power. This shaft power turns a propeller or fan to produce thrust for the aircraft.

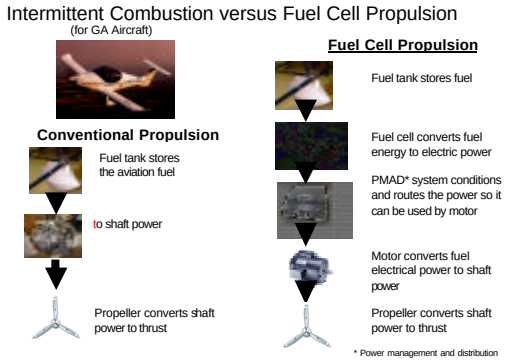

Fig. 2. Electric Drive Propulsion System Comparison

The appeal of the fuel cell begins with the potential of producing emissionless in-flight electrical power. A practical advantage of fuel cells compared to other electrical power sources, is that the fuel is contained external to the cell itself, unlike batteries and capacitors. Therefore, the total energy available is not directly limited by the cell or stack size, but by the ability to store fuel. Fuel cells are also modular and theoretically any voltage or power can be produced by a series and/or parallel configuration of stacks of cells. Hydrogen is used as a fuel due to the high electrical output with minimal fuel weight. Furthermore, the in-flight fuel cell energy conversion is electrochemical and not limited by the thermodynamic Carnot cycle assocated with gas turbine engines.

System Analysis

Three levels of technology were used in the assessment. The first technology level is referred to as Off the Shelf Technology and is based on technology currently commercially available (Table 1). The fuel cell, electric motor and PMAD technologies are based on automotive technology.

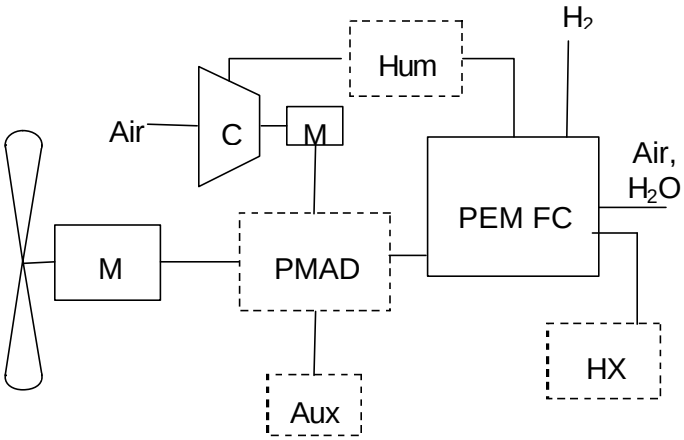

Fig. 3 Electric Drive Propulsion System Line Diagram

The second technology level is referred to as Intermediate Technology and is based on current government and industry technology under focused research or development. The assumed technology includes higher temperature fuel cells, better cooling, and higher efficiency designs.

The third level examined is referred to as Advanced Technology and is generally based on research and laboratory demonstrations being performed by university and government organizations. Technologies include superconducting or cryogenic motors and new higher efficiency higher power density fuel cells.
New materials and possibly cryogenic or superconducting hardware would improve the power density and efficiency of PMAD systems. In addition, innovative designs may reduce the PMAD weight and complexity.

Electric drive propulsion systems were evaluated for two different GA airframes,

	Off-the-Shelf Technology	Intermediate Technology	Advanced Technology
	Based on commercially-available products	*Based on current government and industry research and development*	*Based on government and university laboratory demonstrations*
Fuel Cell Stack	Automotive-derivative PEM fuel cell stack	Higher operating temperature PEM fuel cell stack; higher power densities	New type of fuel cell with different chemistry, higher power densities, more efficient operation
Fuel Cell System	Automotive-derivative compressor, heat exchangers, humidifiers, separator	Integrated heat exchangers, humidifiers, separator into fuel cell; lightweight, more efficient compressor	Humidification, separation, extensive cooling not required
Electric Motor	Automotive-derivative permanent magnet electric motor	Electric motor with advanced cooling and more efficient design	Superconducting electric motor with very efficient and lightweight design
Power Electronics	Automotive-derivative power management and distribution	Higher temperature materials (SiC) and components; advanced cooling; more efficient design	Superconducting electronics for a very efficient and lightweight design
H2 Storage	Mid-pressure (5000 psi) compressed gas; liquid storage for long-duration missions	Improved high pressure composite tanks; lightweight metal hydrides; lightweight, low-temperature chemical reformation	Liquid system design with low boiloff, high safety; or fuel cell able to use common liquid fuels directly

Table 1. Technology Levels used in Electric Drive Propulsion Assessments

the 2-place MCR01 and the 4-place Cirrus SR-20. Both are composite airframes with the most current technology for their size class. The MCR01 is powered by an 81 peak hp Rotax 912 intermittent combustion (IC) engine and the Cirrus is powered by a 200 peak hp Teledyne Continental Motors IO360 IC engine. In addition, propulsion systems for two larger commercial aircraft, the 50-place Embraer ERJ145 and the 100-place Boeing 717, are analyzed at a less detailed level; with the analysis focused on developing technology and system requirements for the electric drive propulsion system. These requirements define the system level weight and efficiency goals necessary for the electric drive system to be performance competitive with current aircraft capabilities. For more detail on the system modeling see reference [4].

General Aviation Assessment

As noted above, two general aviation aircraft have been analytically evaluated for the performance impacts of electric drive propulsion systems. These two aircraft, shown in Figure 4, are the two passenger home-built MRC-01 and the four passenger Cirrus SR-20. While both the MCR-01 and the Cirrus SR-20 were examined, results were similar for both vehicles, thus only the MCR-01 results are presented in this paper.

Fig. 4 MCR-01 and Cirrus SR-20 General Aviation aircraft

Since NASA's objective of reducing (or eliminating) in-flight CO_2 and NO_X emissions is achieved by utilizing the electric system, the real objective of the analysis is to determine if such a system is possible and reasonably competitive with

the baseline intermittent combustion vehicle.

The first assessment was to compare the MCR-01 design with one substituting the Rotax 912 propulsion and fuel system with an off-the-shelf technology comparable power electric drive propulsion and fuel system.

Figure 5 shows the payload-range comparison of the MCR-01. With the Rotax 912 intermittent combustion engine, the vehicle can fly 800 NM and carry a 170 lb pilot and a payload of about 160 lbs. Substituting the off-the-shelf technology electric drive system (with gaseous hydrogen fuel) resulted in an aircraft with a range of about 150 NM, maximum of 130 lb pilot, and no payload. While not an impressive vehicle, it was concluded that an electric drive propulsion system on the MCR-01 system could be tested with off-the-shelf technology. With the liquid hydrogen storage system the range increased to about 500 NM, but no increase in pilot or payload weight capability.

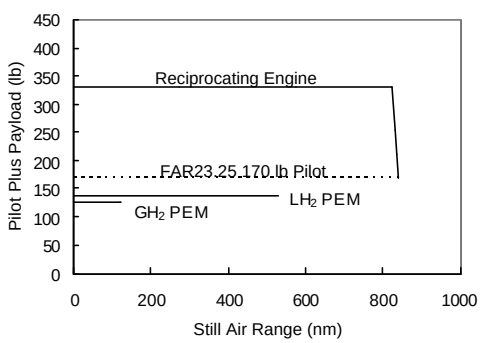

Figure 5. Range-Payload capability for Rotax 912 and Electric Drive Propulsion System 81 hp 130 kts.

Weight breakdowns of the two propulsion systems are shown in Figures 6 and 7. When comparing these weight breakdowns the first thing that becomes obvious is that the Rotax 912 propulsion system in the MCR-01 is less than a quarter of the takeoff weight. The propulsion weight of the MCR-01 with an electric drive system is over half the aircraft take-off gross weight. The main contributors to the electric propulsion system weight are the fuel cell, the motor and the power management and distribution system.

Reducing the electric drive propulsion system weight is the key to making a viable electric drive general aviation aircraft.

Two methods of reducing the propulsion system weight are discussed. First the general aviation vehicle power can be reduced (i.e. reduce cruise speed and increase take-off distance). The second method is to reduce the propulsion system mass by improving technology.

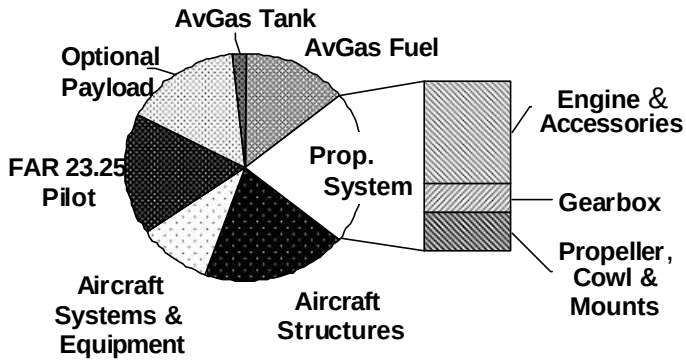

Figure 6. Mass breakdown for the MCR-01 with Rotax 912, range 800 NM. 160 Knots max speed, take-off gross weight of 990 lbs.

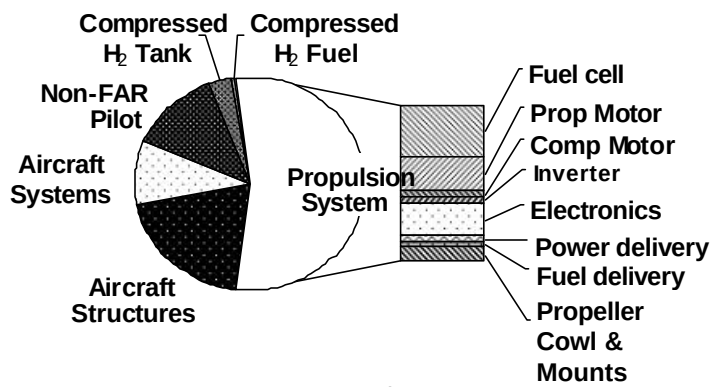

Figure 7. Mass breakdown for the MCR-01 with electric drive propulsion, range 150 NM, 160 Knots max speed, take-off gross weight of 990 lbs.

Another aspect that is illustrated in Figures 5 and 6 is that the fuel weight of the electric drive system is small. However, the tank weight required to contain the compressed gaseous hydrogen becomes a significant portion of the take-off weight, particularly if the range increases to 800 NM. An efficient hydrogen storage system is required for the electric drive aircraft.

Reducing Engine Power

The first option to reduce the weight of the electric drive propulsion system is to reduce the power level in the vehicle. As a result the vehicle will have a lower cruise speed and a longer take-off distance. For the MCR-01, the maximum take-off power was reduced from 81 hp to 49 hp, reducing the maximum continuous cruise speed from 130 kts to 75 kts. This resulted in a lower aircraft ceiling, from 12,000 to 3,000 feet. It also resulted in a longer take-off length, but that length was less than 2000 ft.

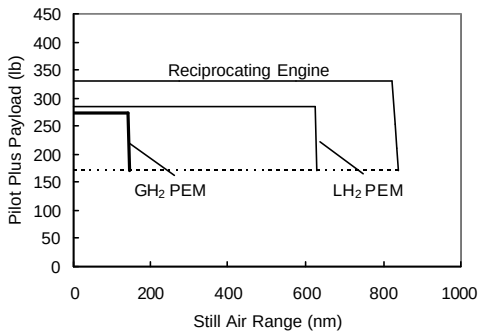

Figure 8. Range-Payload capability for 81 hp Rotax 912 and 41 hp Electric Drive Propulsion 75 kts cruise speed.

The range-payload curve with the electric drive propulsion systems sized at 49 hp is shown in Figure 8 (the Rotax 912 engine remains at 81 hp). Note that if you are willing to reduce speed to 75 kts, the electric drive system provides reasonable payload and range, though not quite as good as the Rotax 912. Payload of about 100 lbs and a range of about 700 NM is achievable with off-the-shelf technology and liquid hydrogen storage. The value of the additional speed with the Rotax 912 is traded-off for the value of lower in-flight emissions with the electric drive system. Tank weight and volume constraints make using gaseous storage undesirable.

Advanced Technology

The second option to reduce the weight of the electric drive propulsion system is to use advanced technology to lighten the propulsion system. The impact of advanced technology is shown in Figure 9. Payload-range curves are shown for the Rotax 912 and for two levels of electric drive propulsion technology; 1) intermediate and 2) advanced technology. These technology levels are described in Table 1. With intermediate or advanced technology electric drive propulsion systems, the MCR-01 provides reasonable performance compared to the Rotax 912, while eliminating in-flight CO_2 and NO_X.

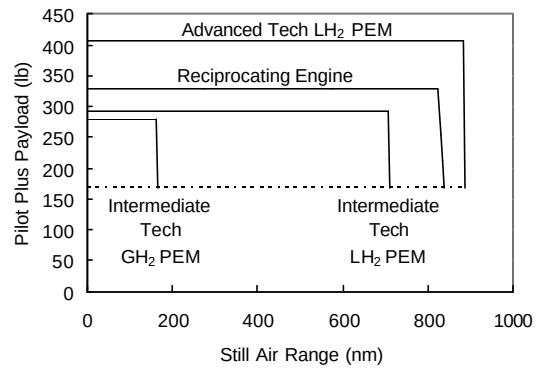

Figure 9. Comparison of advanced electric drive propulsion with Rotax 912 on the MCR-01 aircraft (note; fixed 81 hp)

Fuel Storage

Fuel storage is a significant concern for the MCR-01. For gaseous storage, the mass and volume of the hydrogen storage limits the vehicle range to about 150 NM. While this range limit may be sufficient for demonstrating an electric drive propulsion system, it may not be sufficient for a commercial general aviation vehicle. Use of liquid storage significantly increases the range to about 700 NM.

Commercial Airline Assessment

Two commercial aircraft a 50-passenger Embraer ERJ145 and the 100-passenger Boeing 717 were also examined to determine the electric drive propulsion system requirements to enable these missions. The two aircraft are shown in Figure 10. This paper only shows the results for the 50 passenger Embraer, data on the 100 passenger aircraft are available

		Advanced Technology	50 PAX Projections (at 40% system efficiency)	50 PAX Projections (at 75% system efficiency)
Entire propulsion system		? (0.6) kW/kg	1.9 kW/kg	1.6 kW/kg
Electric motor		8.0 kW/kg	8.6 kW/kg	6.9 kW/kg
Power mgmt. and distribution		? (2.0) kW/kg	3.3 kW/kg	2.6 kW/kg
Fuel cell stack		5.0 kW/kg	4.2 kW/kg	3.4 kW/kg

Table 2. Electric Drive Propulsion System Requirements for 50 passenger Embraer ERJ145

from reference [4]. This analysis is very high level, taking the systems analyzed for the general aviation and projecting values for the larger aircraft. One concern with this analysis was the PMAD system weight estimate for "advanced technology". Due to the preliminary nature of this analysis, no analytical assessment of the specific equipment or functions for PMAD on the Embraer was performed. The value of PMAD specific weight was obtained from past NASA experience. Further analysis is required, including assessing specific advanced PMAD technologies for aeronautics applications, a PMAD system layout, and an assessment of the specific functions and equipment.

The specific weight, kilowatt of power output for each kilogram of weight (kW/kg) is the standard measure for aerospace electric power systems weight. Greater values of kW/kg represent lighter weight systems. The electric drive propulsion system mass requirements for the Embraer ERJ145, along with advanced technology electric drive propulsion specific weight projections are shown in Table 2.

The two sets of requirements data are shown for the Embraer. These data represent two different efficiency levels for the electric drive system; 40% and 75%. These efficiency levels bracket the large uncertainty in system efficiency projected for the advanced technology. The specific weight required to enable the electric drive propulsion is between 1.6-1.9 kW/kg. Also shown in Table 2 is the specific weight requirements breakdown for the major elements of the Electric Drive Propulsion System, specifically the fuel cell, electric motor and the PMAD systems. For the Embraer and larger aircraft electric drive propulsion efficiency and propellant weights become significant portions of the vehicle weight.

Figure 10. Embraer ERJ145 and Boeing 717-200

As a point of reference, an estimate of the specific weight of the advanced technology electric drive propulsion system is provided. The projected overall specific weight with the advanced technology is 0.6 kW/kg, which is less than the requirement. Examining the subsystem projections for the fuel cell and electric motor indicate that the weights of these subcomponents are reasonably within the system requirements, depending on the system efficiency. The PMAD system is driving the overall system weight to exceed the requirement. The high level of PMAD weight uncertainty, noted above, translates into a high level of uncertainty for the overall system. A more detailed analysis is required before any determination can be made of the ability of these advanced technologies to meet the specific weight requirement. The key point

to note is that the PMAD technology is a critical technology for this application.

Reducing Engine Power

Similar to the general aviation, the 50 passenger electric drive propulsion specific weight can be significantly reduced by reducing the cruise speed of the aircraft. As shown in Figure 11, reducing the cruise speed from Mach 0.75 to 0.5 reduces the specific weight requirement by 0.6 kW/kg. (Note that a speed reduction Mach 0.75 to Mach 0.5 resulted in a 10 minute longer block time for a 250 NM flight segment)

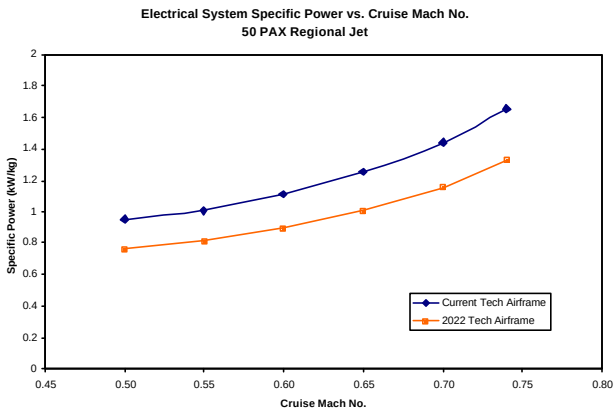

Figure 11. Specific Weight requirements reduction with lower cruise speed.

In addition, advanced aircraft weight and drag reductions can also reduce the electric drive requirements. The results of evaluating the impact of advanced aircraft technologies are also shown in Figure 11. For demonstration purposes, the NASA advanced technologies currently being developed for 2022 were evaluated. The application of these aircraft technologies help in two ways. First it reduces the weight of the aircraft system, that weight is then available for the propulsion system. Second lower aircraft drag reduces the power requirements on the electric drive system, thus the smaller engine weights less. The NASA aircraft technologies that were examined reduced the electric drive propulsion specific weight requirements by about 0.2 kW/kg.

Technology Status

Several key technologies have been identified, including hydrogen fuel storage, fuel cells, electric motors, and power management and distribution. NASA Glenn Research Center has begun research addressing these areas.

Hydrogen Fuel Storage

As noted above, storage of the hydrogen is also a critical issue for PEM Electric Drive Propulsion System. Due to the mass, volume, and purity constraints, only non-hydrocarbon hydrogen storage methods are analyzed for the MCR-01. Ten different methods, including compressed and liquid hydrogen, metal hydrides, and carbon nanotubes (storage within nanotube structure; not making compressed gas tanks from nanotubes) are compared by mass and volume using the best available industry and/or physical data. Storage methods that require heating, catalysis, or other subsystems are penalized accordingly. The comparison is shown in Figure 12. Estimated error bars are included to show the uncertainty and the MCR01 takeoff gross weight (TOGW) is shown for a sense of scale for the mass axis. In addition, gasoline data is shown as an equivalent energy source, not as a possible fuel to reform into hydrogen. Liquid hydrogen storage (or slush hydrogen) results in the lowest mass storage and volume requirements to store the fuel. Some of the other storage options offer the significant benefit of not having to store cryogenic hydrogen. However, the additional mass and volume requirements are prohibitive for this aircraft application.

Fuel Cell Technology

NASA currently has a significant effort in developing new fuel cell technology. The objective of this technology program is reducing fuel cell weight and increase efficiency. These technologies include developing novel fuel cell components and system design. This work is being completed under Small Business Innovative Research (SBIR) activities. In addition, the work also includes advanced materials development to increase the PEM membrane operating temperature to 200 ^{o}C and developing fiber reinforced bi-polar

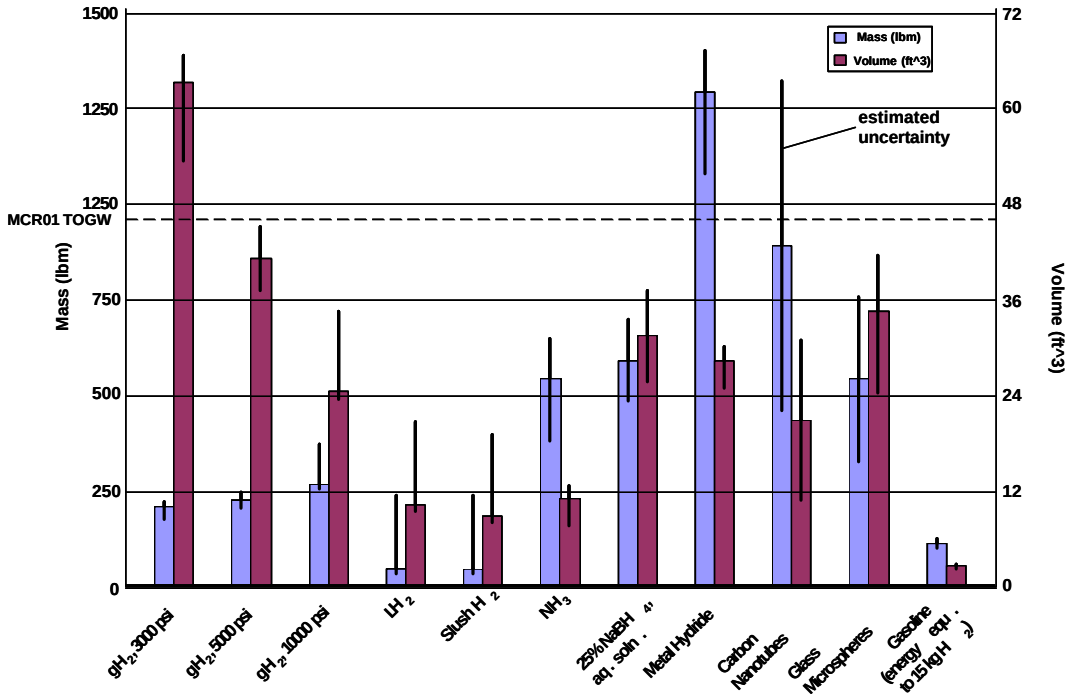

Figure 12. Hydrogen fuel storage options for 32 lbs of hydrogen. (800 NM cruise range for the MCR-01.

plates and end plates. The impact of these improvements is shown in figure 13.

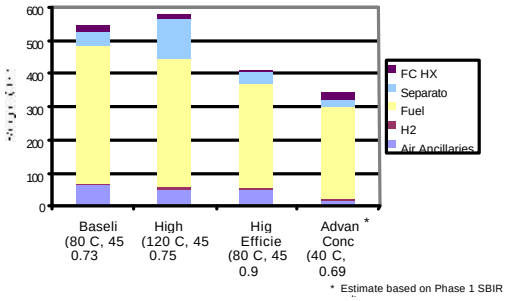

Figure 13. Impact of fuel cell technology improvement on specific weight.

Electric Motor Technology

Significant technology development is preceding for aircraft applications. The major focus of this activity is to reduce weight, improve efficiency and reduce cooling requirements. The major technology being addressed for the advanced application is superconducting or cryogenic motors. One significant activity is to develop and test a 10 hp cryogenic motor. Current hardware for this activity is shown in Figure 14.

In addition, NASA has begun, under a National Research Announcement (NRA), a 30,000 hp, liquid hydrogen cooled preliminary design. A preliminary sketch of this design in shown in Figure 15.

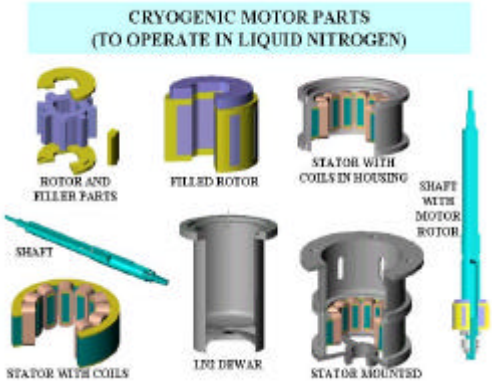

Figure 14. Glenn 10 Hp Cryogenic Motor hardware.

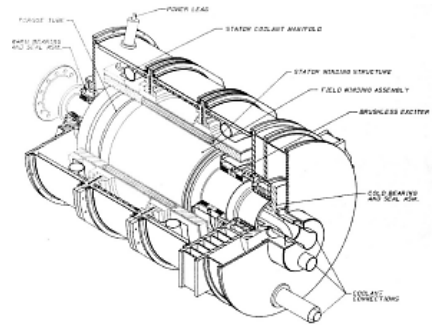

Figure 15. 30,000 lb, LH2 cooled motor sketch.

Power Management and Distribution Technology

One of the outputs of the initial system assessment was the impact of the PMAD weight. The importance of PMAD can be overlooked because it is not a specific component but a combination of electronics, controls, conductors, and other systems. Due to the voltage variations of the fuel cell and controls required for all of the motors and fuel cell, multiple components are required. In addition, an inverter is need when an AC motor is used because the fuel cell's power is DC. Circuit protection is also required in case of over voltage or power surges. Currently, NASA is performing a conceptual design of the PMAD system for the MCR-01. This analysis will help us understand the requirement of the PMAD system for aircraft applications. NASA is also constructing an electrical systems test-bed that will integrate the various components in a configuration relevant to aerospace applications. This enables the design and testing of various PMAD configurations and approaches, as well as dynamics and control schemes for the entire system. Only then will an accurate estimate of PMAD weight, volume, and complexity will be determined.

Conclusions

NASA's 21st Century Aeropropulsion Vision provides a series of propulsion revolutions which culminates in an emissionless, silent aircraft. The propulsion system for this emissionless aircraft is envisioned as an electric drive system. This system eliminates the generation of NO_X and CO_2, thereby protecting the local air quality and global climate. While this is a long term vision, nearer term technology contributions can be made. Specifically, demonstrations on general aviation aircraft using electric drive propulsion are possible with current off-the-shelf technology. In addition, general aviation aircraft with reasonable payload and range capability may be possible with technology currently in development. The electric drive propulsion system requirements are also provided for small commercial aircraft.

These assessments also defined the key technologies for an electric drive propulsion system. These key technologies include fuel cells, electric motors, power management and distribution system and hydrogen storage. NASA has begun the long term research to enable the Alternate Energy Propulsion Revolution with an emissionless, silent Electric Drive Propulsion System.

Acknowledgements

The authors would like to acknowledge the leadership provided by the Power and Propulsion Project of the Vehicle Systems Program in sponsoring this research. The authors would also like to express their thanks to Dave Ercegovic (Revolutionary Aeropropulsion Concepts Project), Bruce Bream (Zero CO_2 Project), Ms. Marla Perez-Davis, Mr. Scott Lattime, Mr. Gerald Brown Ms. Anita Liang, Mr. Jaiwon Shin and Ms. Sanda App for their contributions to this paper.

References

1. *NASA 2003 Strategic Plan*, National Aeronautics and Space Administration, dated 2003
2. *NASA Glenn Research Center Strategic Implementation Plan- Fiscal Year 2003*
3. Sehra A. and Shin J., *Revolutionary Propulsion Systems for 21st Century Aviation*, IGTI '03 Tokyo Conference, 2003
4. Freeh J., et. al., *Electrical Systems Analysis at NASA Glenn Research Center: Status and Prospects*, To be presented to the Applied Vehicle Technology Panel of the NATO Research and Technology Agency, Brussels, Belgium, April 7-11, 2003.
5. Berton, J.J., et. al., *An Analytical Performance Assessment of a Fuel Cell-Powered, Small Electric Airplane*. To be presented to the Applied Vehicle Technology Panel of the NATO Research and Technology Agency, Brussels, Belgium, April 7-11, 2003.